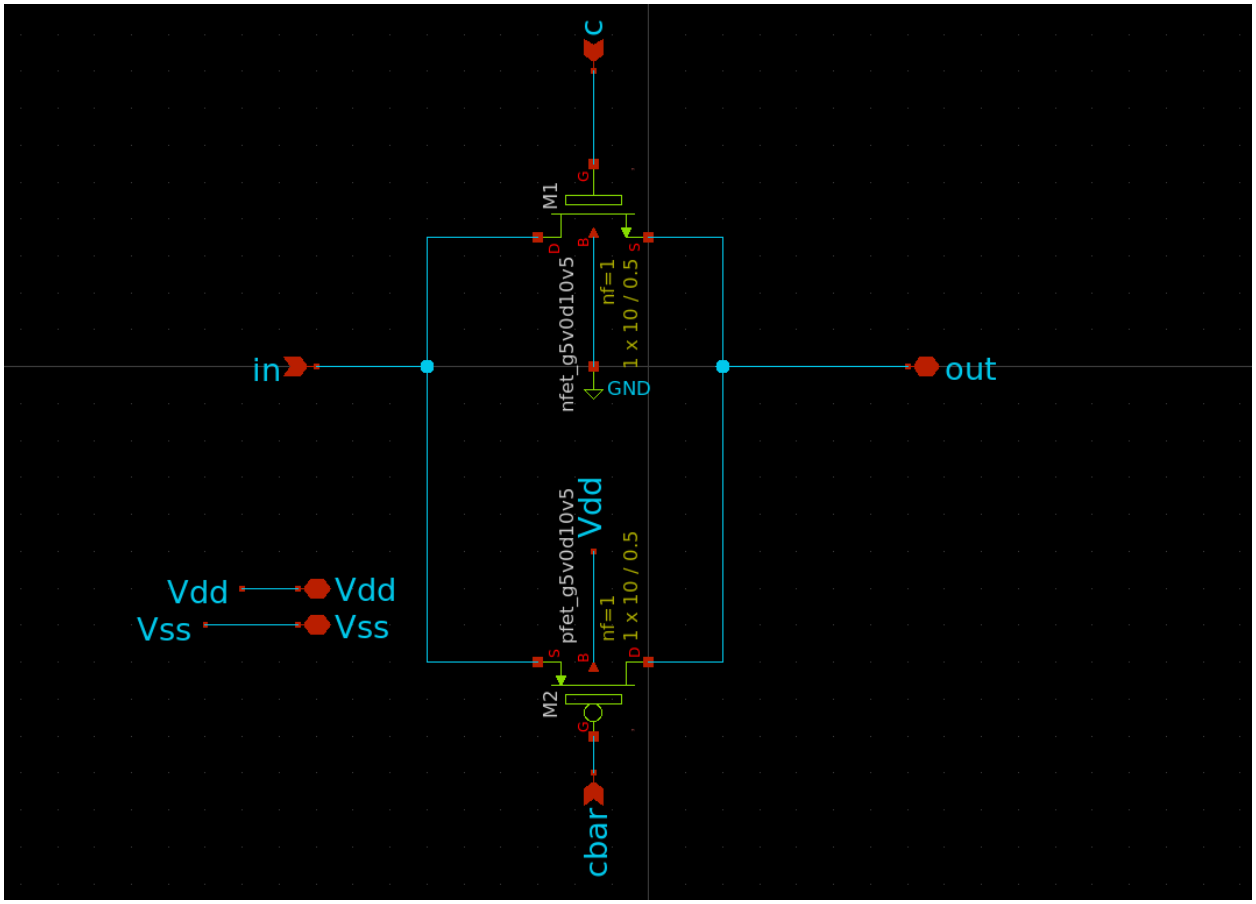

T Gate Schematic

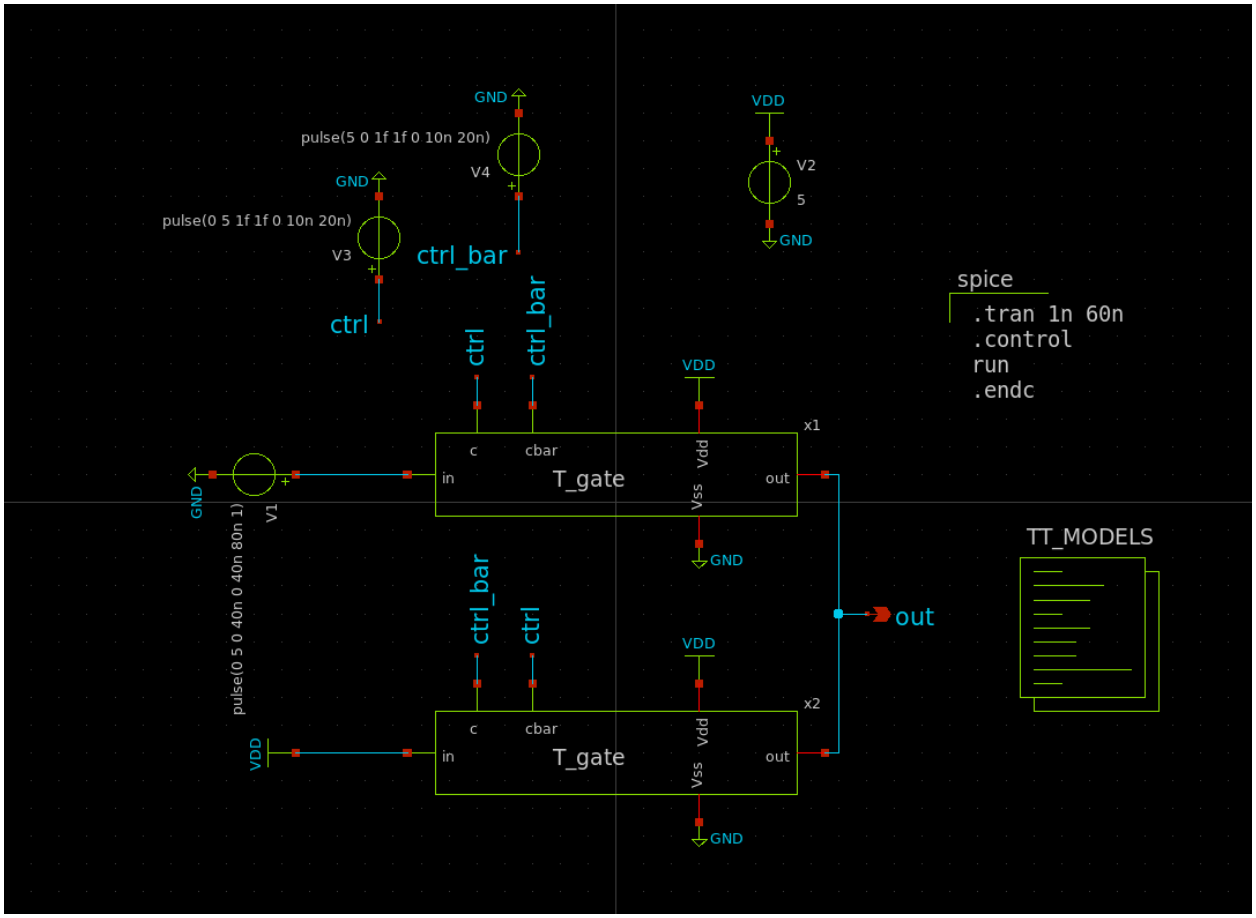

T-Gate SPDT Switch Operation Test Bench

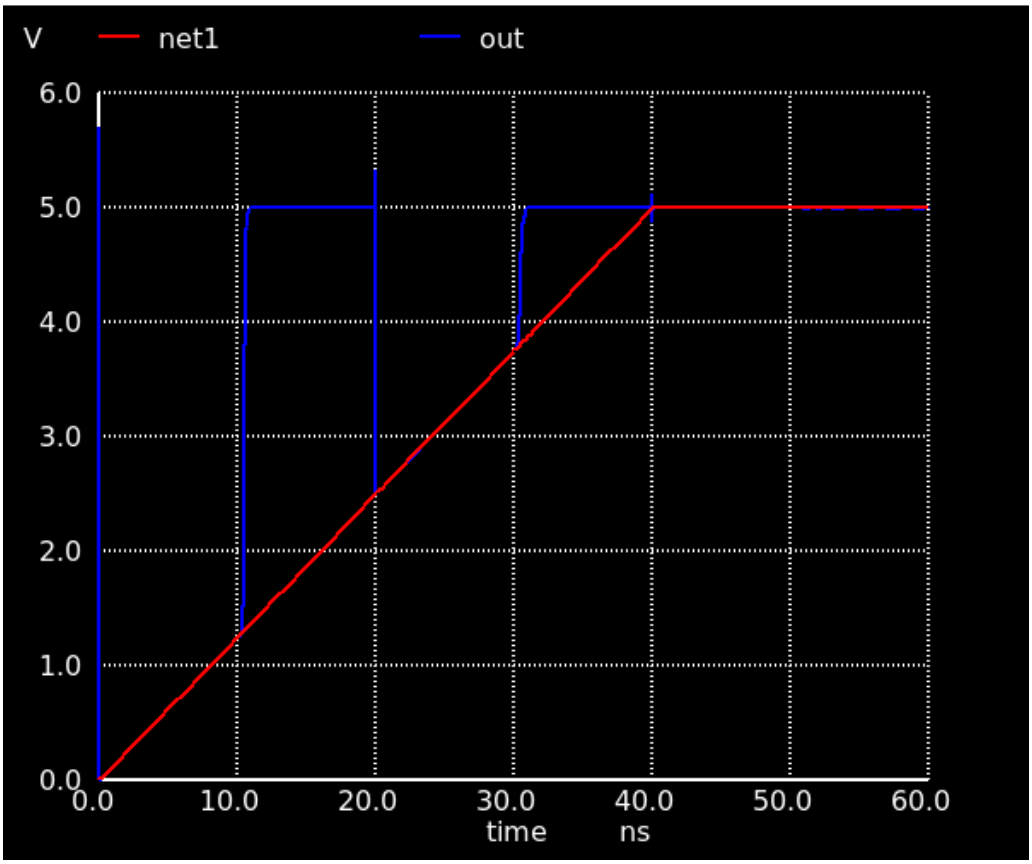

T-Gate SPDT Switch Simulation Results

This simulation verifies T-Gate SPDT Switch operation for switching between supplying Analog Vin and VDD to the Capacitor top plates in the CDAC as shown in the below diagram from TI:

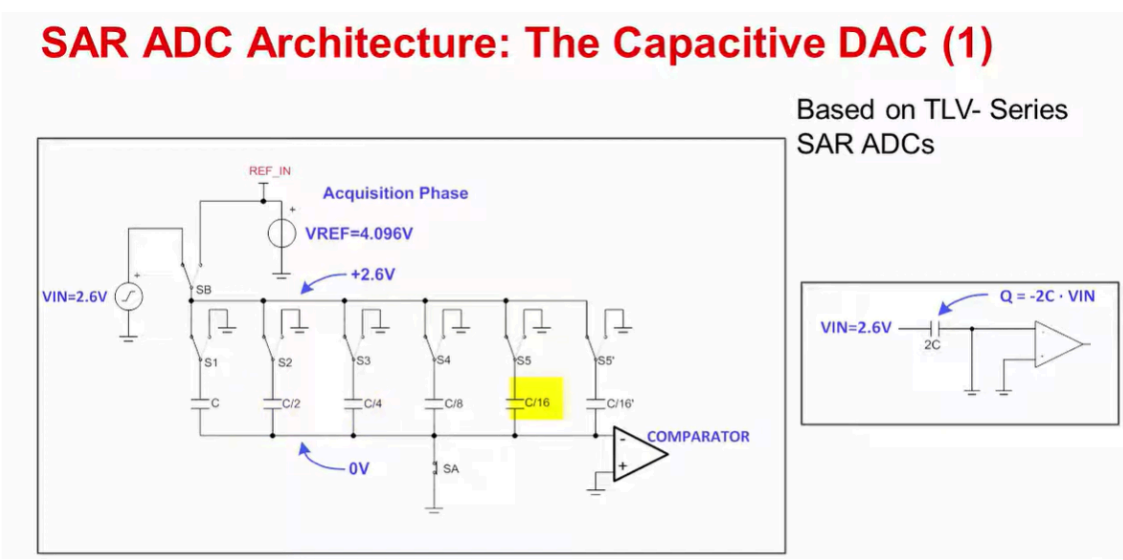

https://www.youtube.com/watch?v=Ubw5bJUjXyc

Next, for more compact simulation at the top level I wanted to package this SPDT switch into its own subcircuit

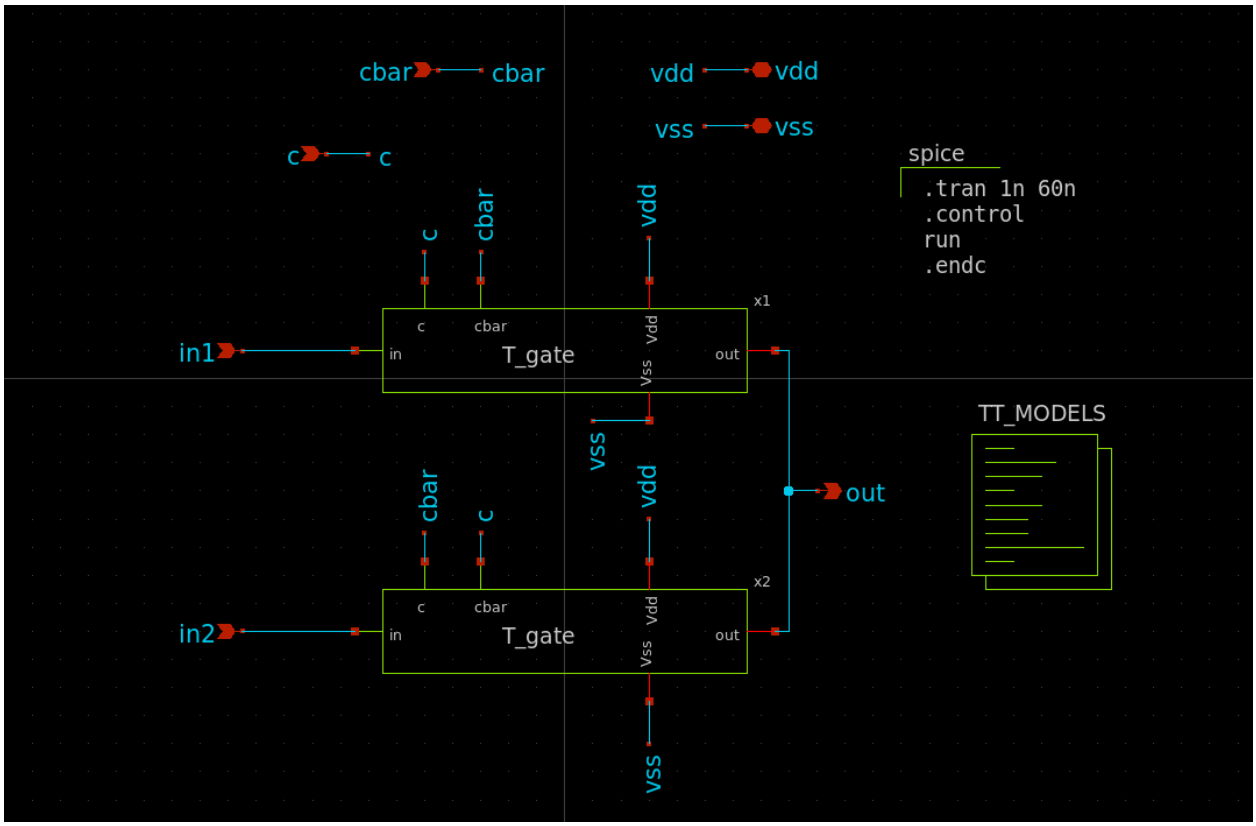

SPDT Schematic

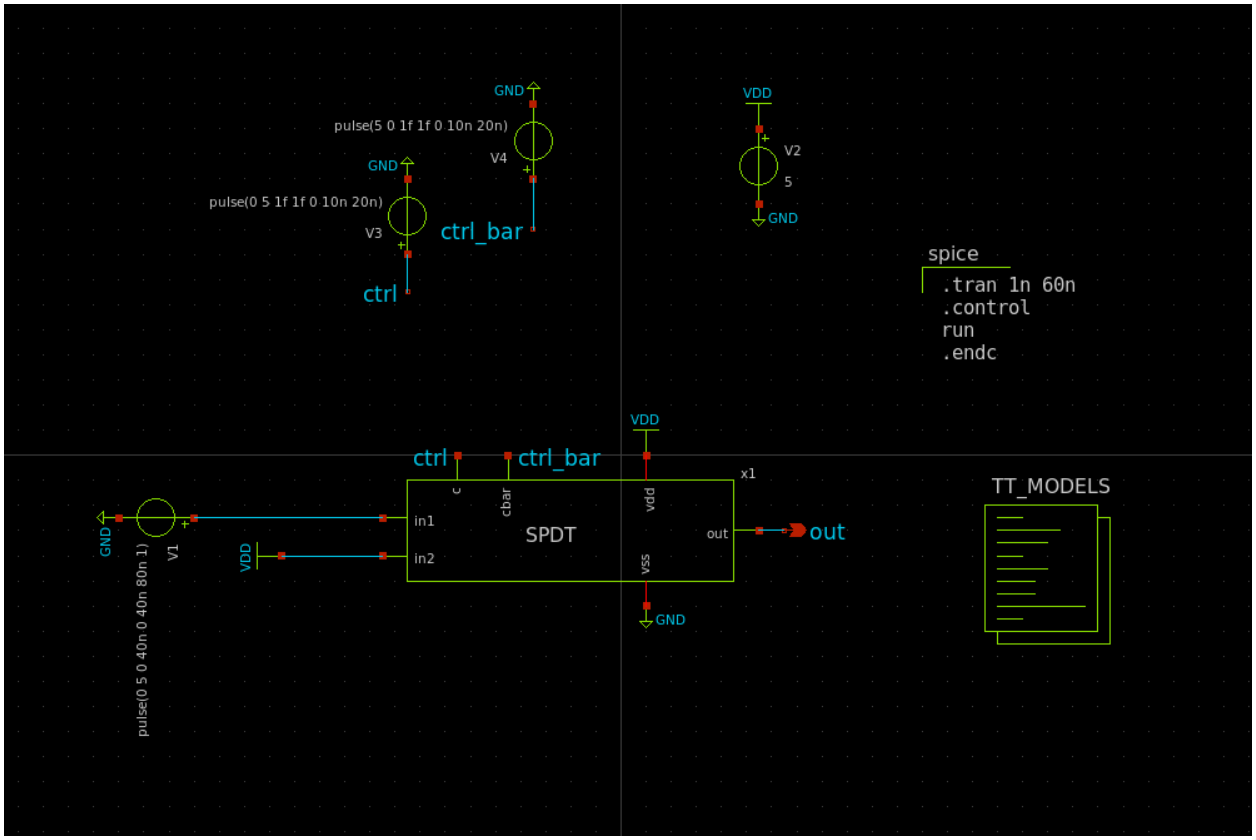

SPDT Test Bench

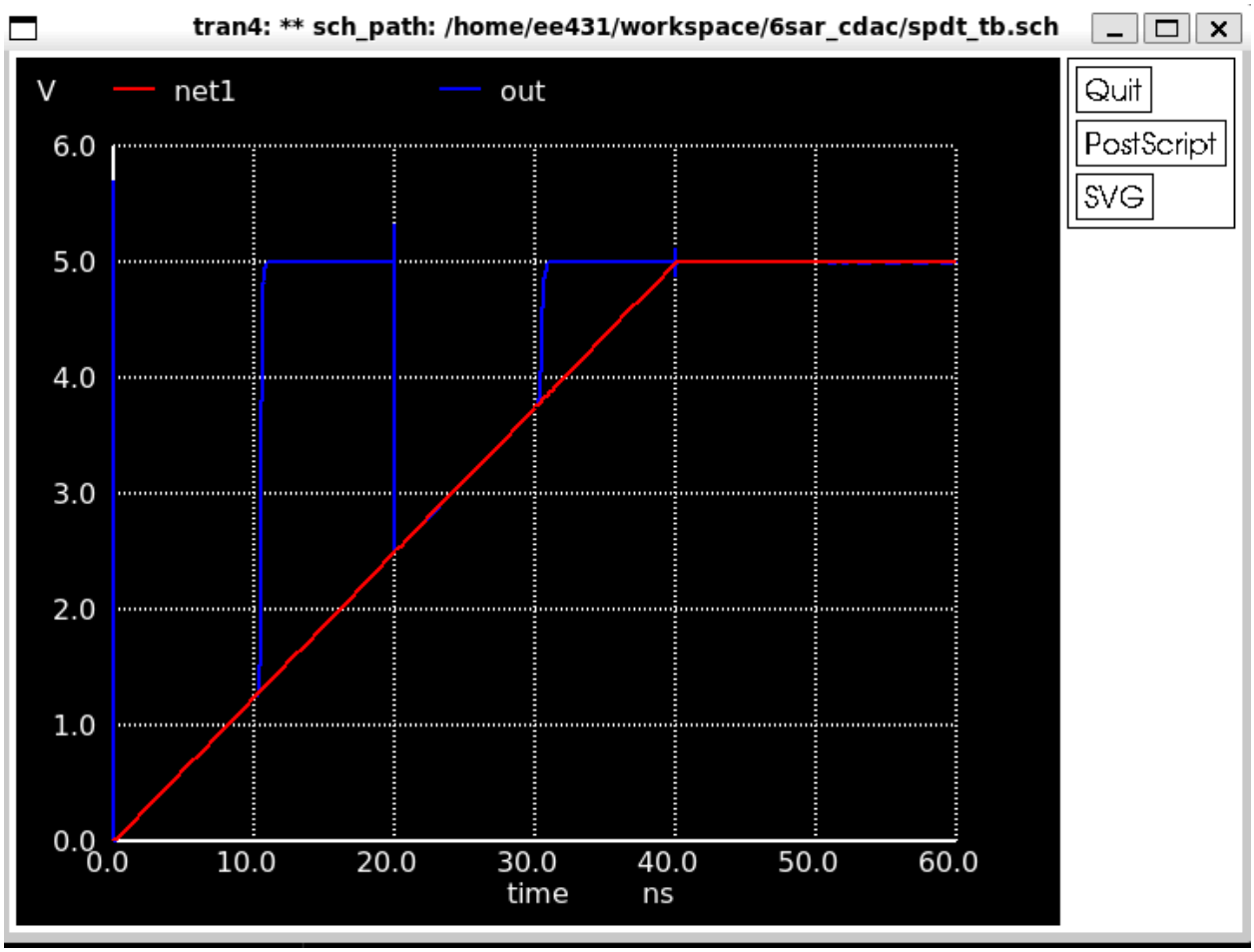

SPDT Simulation Results

This shows successful operation of the SPDT to pass analog inputs and VDD. This can be used in the CDAC implementation

Common mode switching CDAC

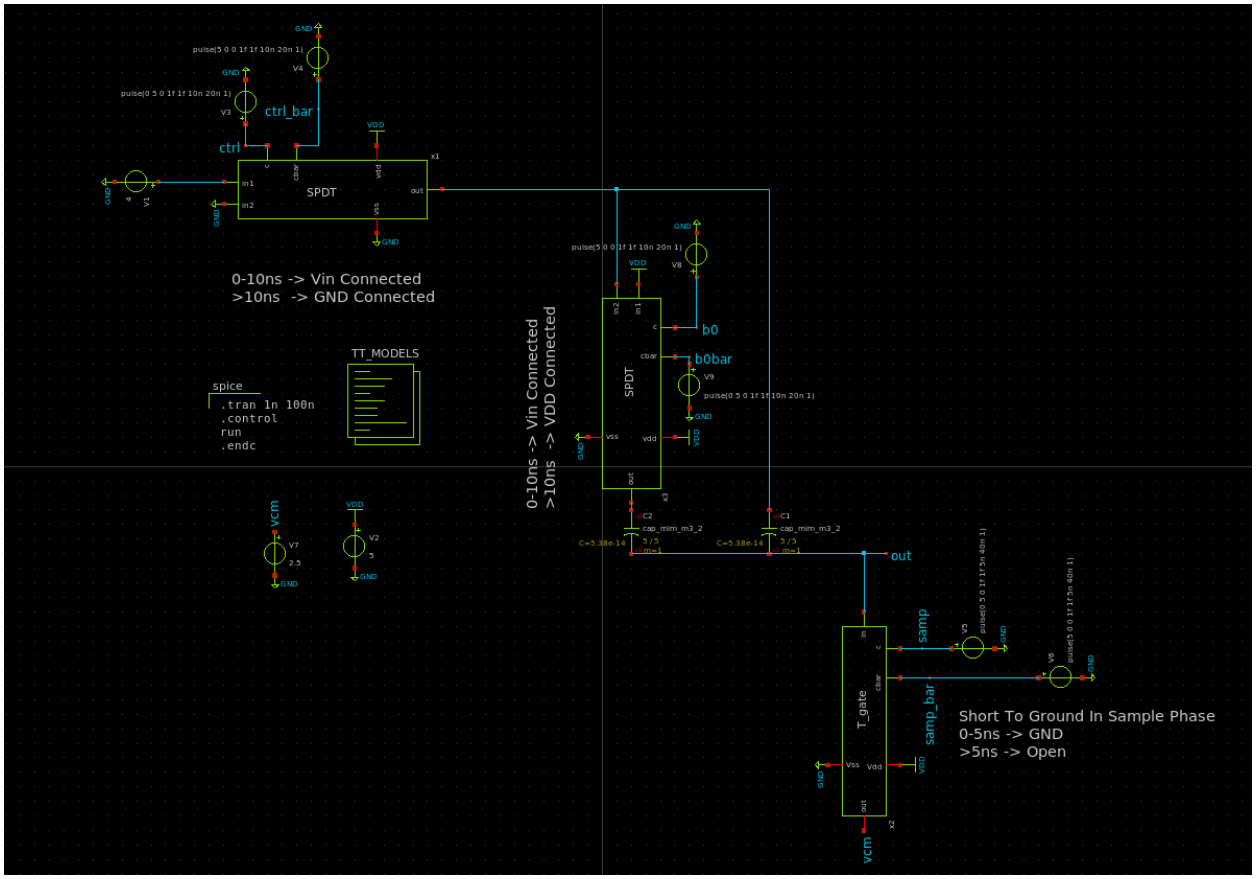

First Successful Common Mode Switching CDAC (1 bit)

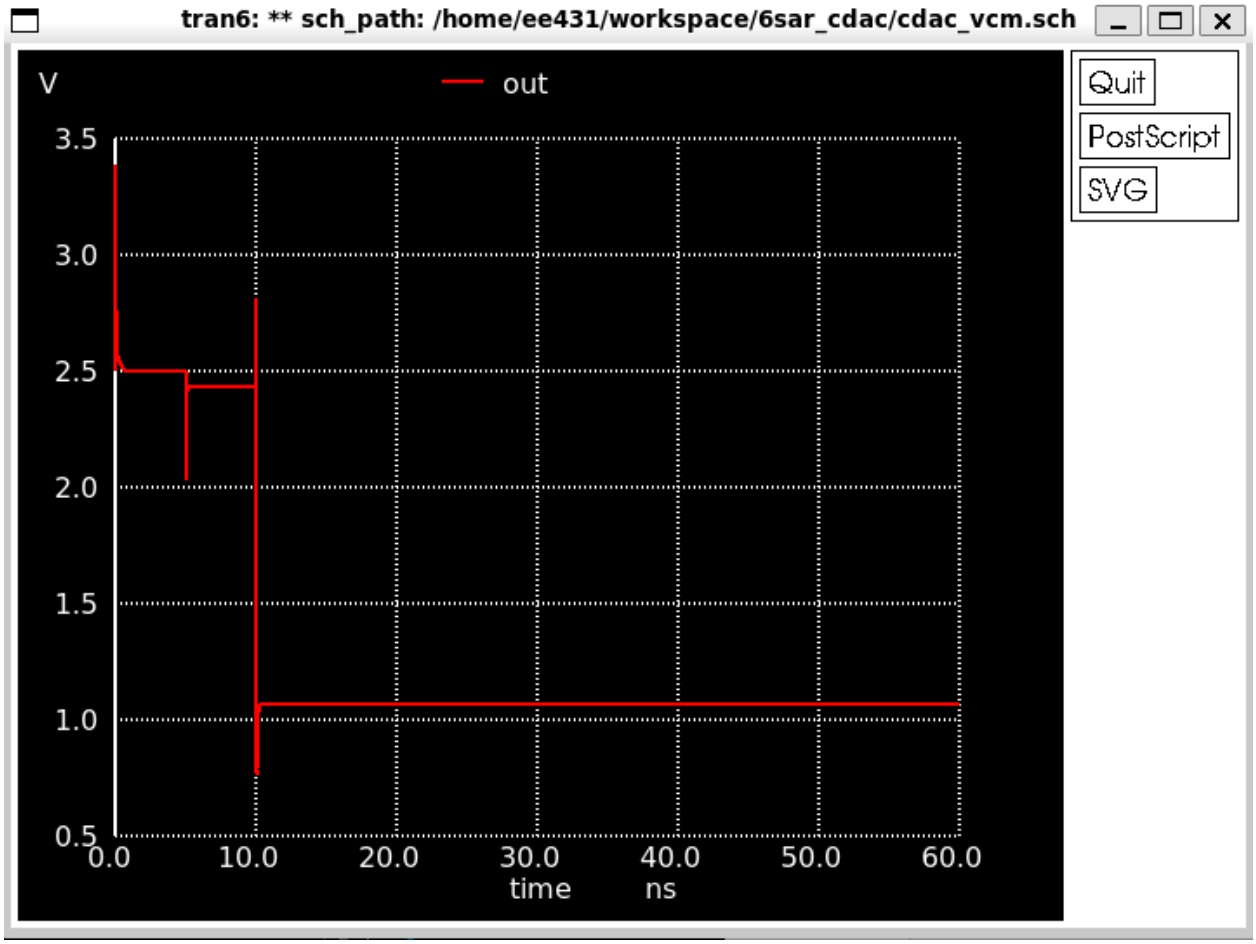

Simulation Results

Vout = 1V = Vcm - Vin + Vguess = 2.5 - 4 + 2.5